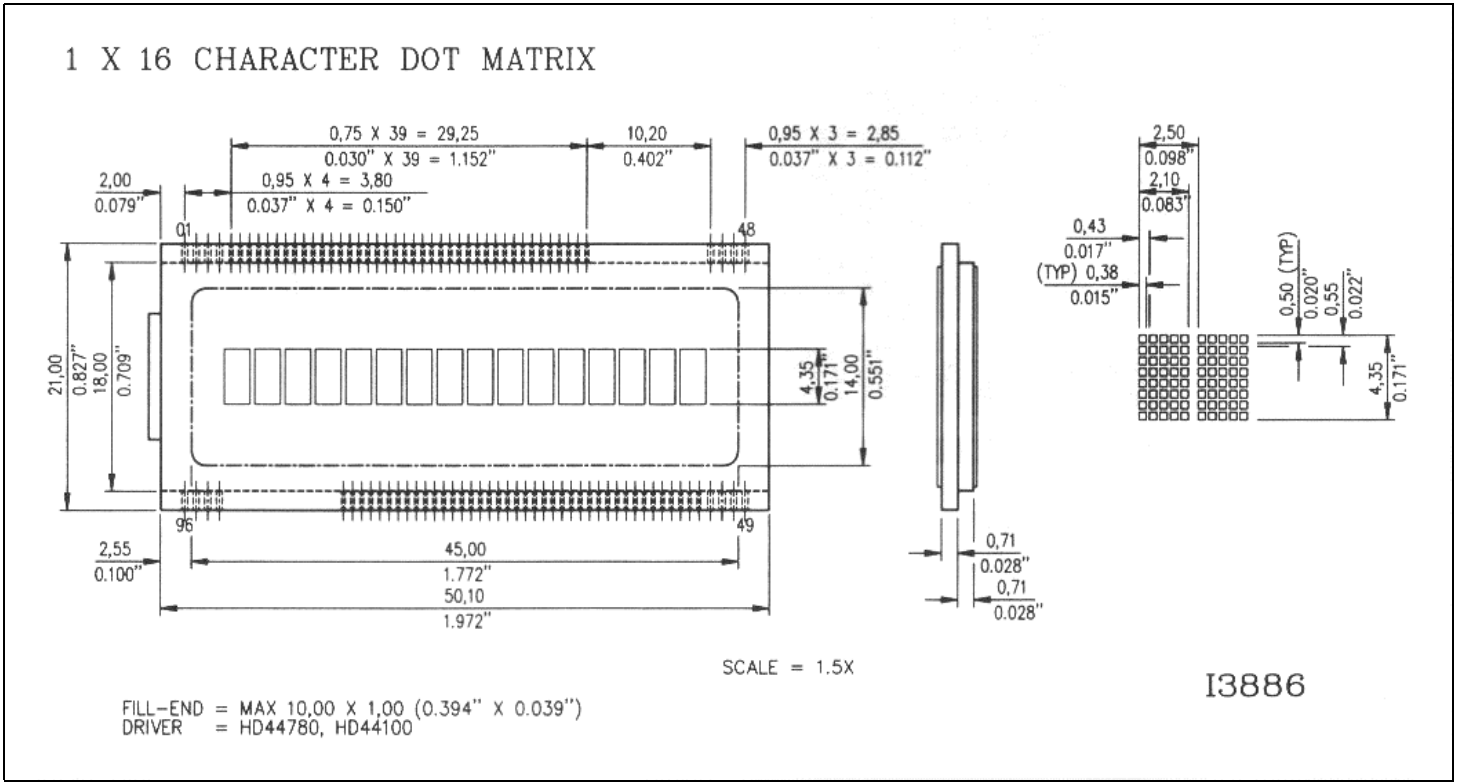
1 X 16 CHARACTER DOT MATRIX
0,75 X 39 = 29,25
0.030" X 39 = 1.152"
10,20
0.402"
0,95 X 3 = 2,85
0.037" X 3 = 0.112"
2,00
0.079"
0,95 X 4 = 3,80
0.037" X 4 = 0.150"
01
48
96
49
21,00
0.827"
18,00
0.709"
4,35
0.171"
14,00
0.551"
2,55
0.100"
45,00
1.772"
50,10
1.972"
0,71
0.028"
0,71
0.028"
2,50
0.098"
2,10
0.083"
0,43
0.017"
(TYP) 0,38
0.015"
0,50 (TYP)
0.020"
0,55
0.022"
4,35
0.171"
SCALE = 1.5X
I3886
FILL-END = MAX 10,00 X 1,00 (0.394" X 0.039")
DRIVER = HD44780, HD44100